RS-WS-N01-TR-1 Soil temperature and moisture transmitter 485 type manual

Document version：V1.0

Table of Contents

1.product description 4
1.1product description 4
1.2Features 4
1.3 Technical Parameters 4
1.4product model 5
2.Dimensions 5
3.Instructions 5
3.1 Quick Test Method 5
3.2 Buried survey 6
3.3 Precautions 6
4.Equipment installation instructions 7
4.1 Check before installation 7
4.2 Interface Description 7
4.3Wiring instructions 7
5.Configuration software installation and use 7
5.1 Software selection 7
5.2 parameter settings 7
6.letter of agreement 9
6.1Communication basic parameters 9
6.2 Data frame format definition 10
6.3Register address 10
6.4 Communication protocol example and explanation 11
7.Common problems and solutions 11
7.1 Device cannot be connected to PLC or computer 11
8. contact details 错误！未定义书签。
9.Document history 错误！未定义书签。

1.product description

1.1product description

The sensor is suitable for the measurement of soil temperature and moisture. After comparison with the German original high-precision sensor and the calibration of the actual soil drying weighing method, the sensor has high accuracy, fast response and stable output. It is less affected by soil salinity and is suitable for various soil qualities. Can be buried in the soil for a long time, resistant to long-term electrolysis, corrosion resistance, vacuum potting, completely waterproof. The sensor is widely used in scientific experiments, water-saving irrigation, greenhouses, flowers and vegetables, grassland pastures, soil rapid measurement, plant cultivation, sewage treatment, grain storage, and the measurement of moisture and temperature of various particulate matter.

1.2Features

1) High measurement accuracy, fast response speed and good interchangeability.
2) It is less affected by soil salt content and can be applied to various soil qualities.
3) The electrode adopts specially treated alloy materials, which can withstand strong external impact and is not easy to damage.
4) Completely sealed, resistant to acid and alkali corrosion, can be buried in the soil or directly into the water for long-term dynamic detection.
5) High precision, fast response, good interchangeability, probe insertion design ensures accurate measurement and reliable performance.

1.3 Technical Parameters

DC power supply (default)	DC 4.5-30V	
Maximum power consumption	0.5W（24V DC powered by）	
Operating temperature	-40℃~+60℃	
Soil moisture parameters	Range	0-100%
	Resolution	0.1%
	Accuracy	0-50% Inside 2%, 50-100% Inside 3%
Soil temperature parameters	Range	-40~80℃
	Resolution	Resolution：0.1℃
	Accuracy	±0.5℃
Protection level	IP68	
Probe material	Anti-corrosion special electrode	
Sealing material	Black flame retardant epoxy resin	
Default cable length	2 meters, cable length can be customized	
Dimensions	45*15*123mm	
output signal	RS485(Modbus protocol)	

1.4product model

RS-			Company code
	WS-		Soil temperature and moisture transmitter
	SD-		Soil moisture transmitter

		N01-		RS485 (Modbus-RTU protocol)
			TR-1	Soil testing enclosure

2.Dimensions

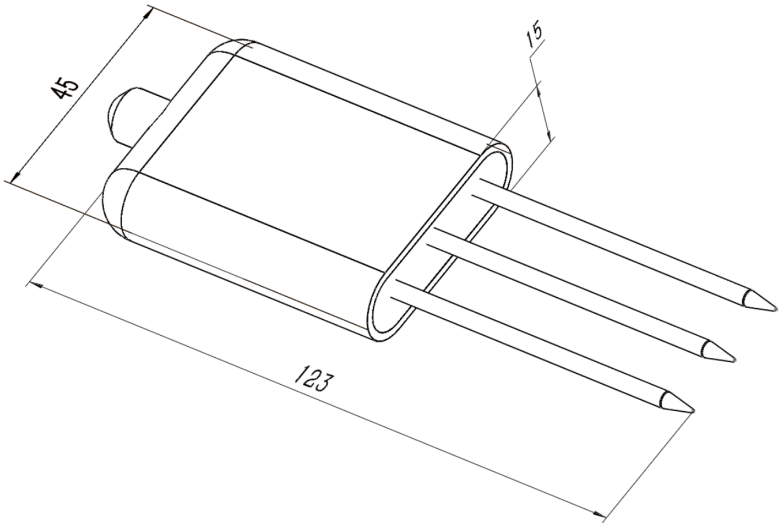

Equipment size drawing (unit: mm)

3.Instructions

3.1Quick Test Method

Choose a suitable measurement location, avoid stones, ensure that the steel needle does not touch hard objects, throw away the surface soil according to the required measurement depth, maintain the original tightness of the soil below, hold the sensor vertically into the soil, insert It is not allowed to sway from side to side. It is recommended to measure multiple times to get the average value within a small range of a measuring point.

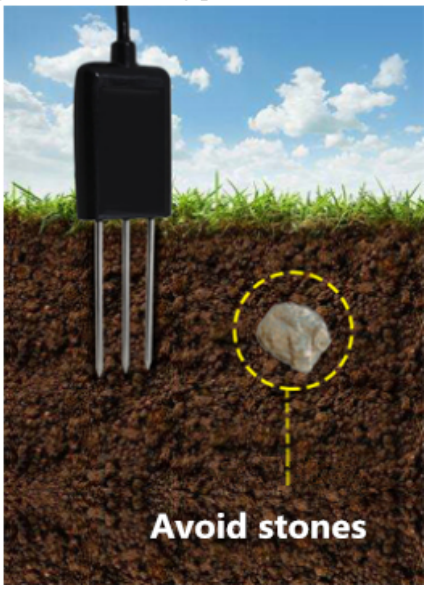

3.2 Buried survey

Dig a pit> 20cm in diameter vertically, insert the steel needle of the sensor horizontally into the pit wall at a predetermined depth, and fill the pit tightly. After a period of stability, it can be measured and recorded for several days, months or even longer.

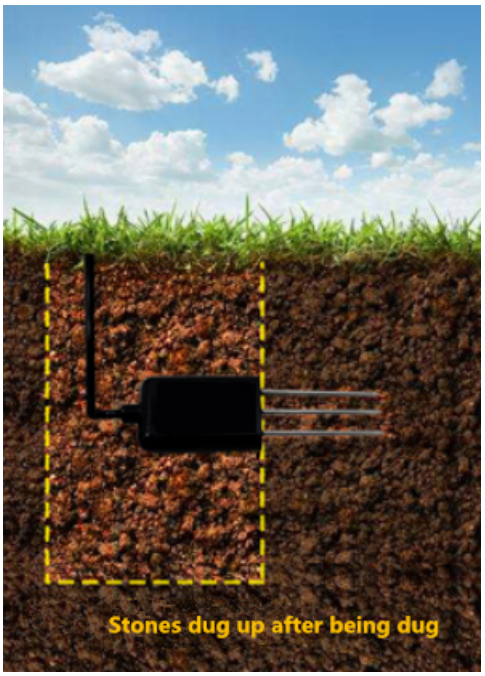

3.3 Precautions

1. The steel needle must be fully inserted into the soil during measurement.
2. Avoid direct sunlight on the sensor causing excessive temperature. Pay attention to lightning protection when using in the field.
3. Do not bend the steel needle violently, do not pull the sensor lead forcibly, and do not drop or hit the sensor violently.
4. The protection grade of the sensor is IP68, which can soak the sensor in the water.
5. Due to the existence of radio frequency electromagnetic radiation in the air, it is not appropriate to stay in the air for a long time.

4.Equipment installation instructions

4.1Check before installation

Equipment List:
1. One sensor device
2. Qualification certificate, warranty card

4.2 Interface Description

Wide voltage power input can be 4.5 ~ 30V. When connecting the 485 signal line, please note that the two lines of A / B cannot be reversed, and the addresses of multiple devices on the bus cannot conflict.

4.3 Wiring instructions

Thread color	Explanation	Remarks
brown	Power is positive	4.5~30V DC
black	Power ground	GND
yellow	485-A	485-A
blue	485-B	485-B

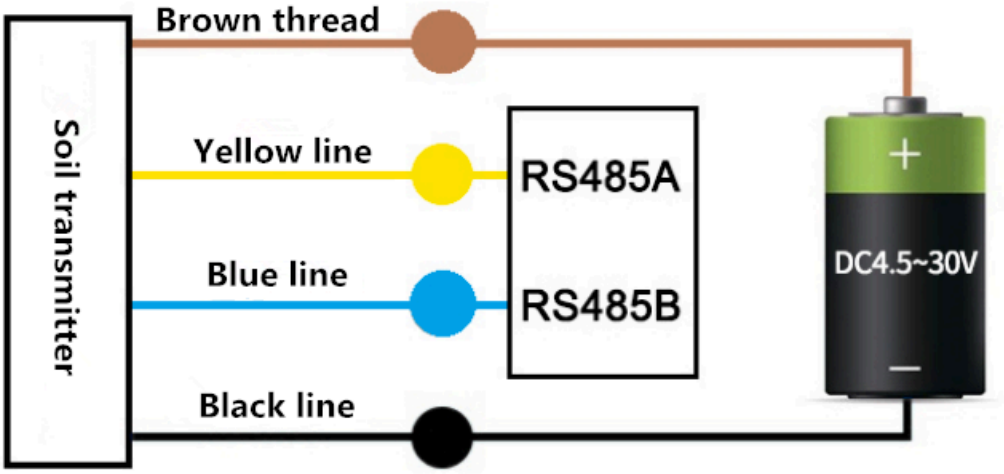

5.Configuration software installation and use

5.1 Software selection

Open the data package, select "Debug software" --- "485 parameter configuration software", find

Just open it.

5.2 parameter settings

①, select the correct COM port ("COM"-"Properties-Device Manager-Port" to view the COM port), the following figure lists the driver names of several different 485 converters.

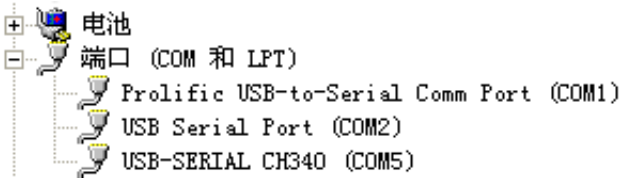

②, only connect one device and power on, click the test baud rate of the software, the software will test the baud rate and address of the current device, the default baud rate is 4800bit / s, the default address is 0x01.

③ Modify the address and baud rate according to the needs of use, and at the same time, you can query the current functional status of the device.

④ If the test is unsuccessful, please recheck the device wiring and 485 driver installation.

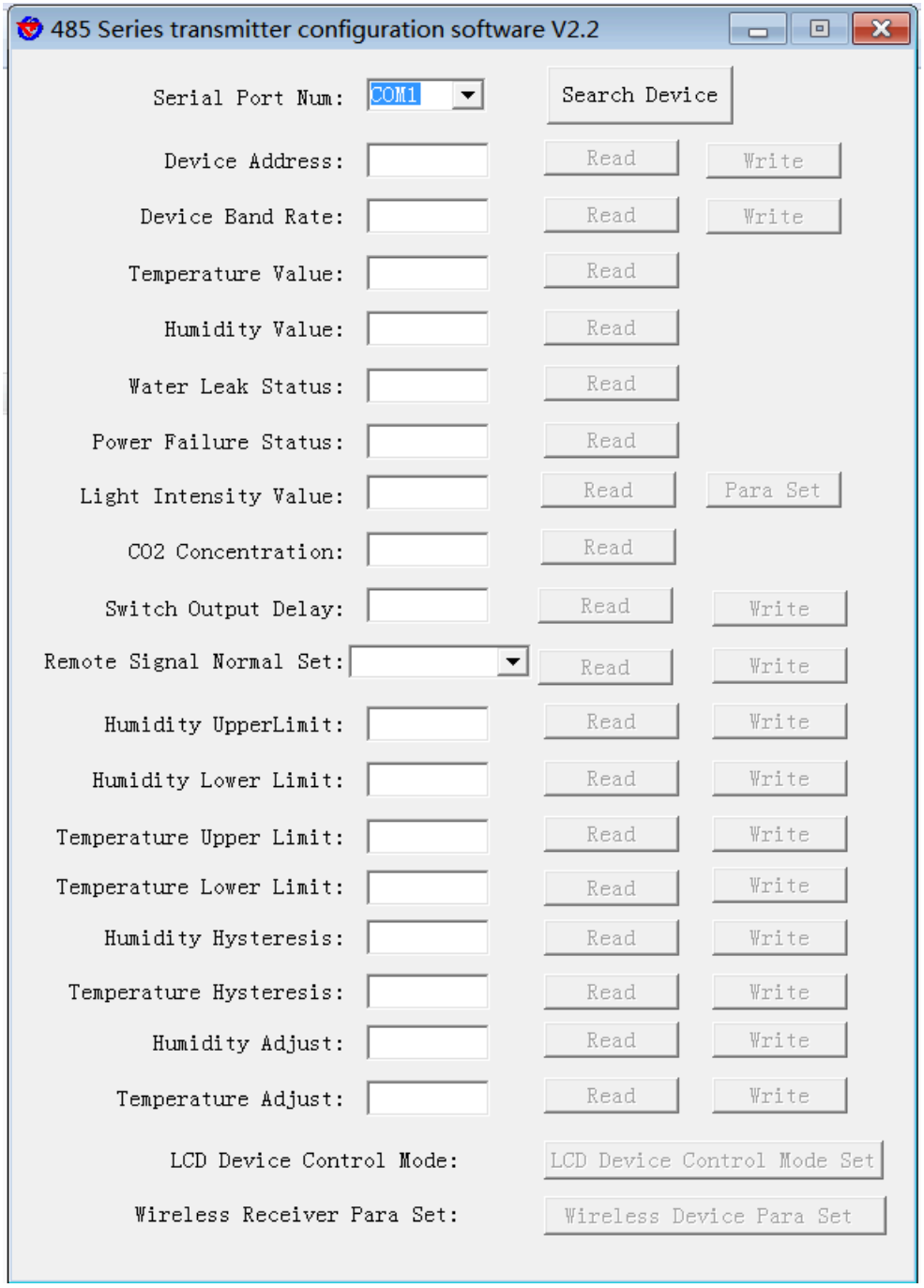

6.letter of agreement

6.1Communication basic parameters

Coding	8-bit binary
Data bit	8 bit
Parity bit	no
Stop bit	1 person
Error checking	CRC (Redundant Cyclic Code)
Baud rate	Can be set, the factory default is 4800bit / s

6. 2 Data frame format definition

Using Modbus-RTU communication protocol, the format is as follows:
Time for initial structure ≥ 4 bytes

Address code = 1 byte
Function code = 1 byte
Data area = N bytes
Error check = 16-bit CRC code
End structure ≥ 4 bytes of time
Address code: the address of the transmitter, which is unique in the communication network (factory default 0x01).
Function code: instruction function instruction issued by the host.
Data area: The data area is specific communication data, pay attention to the high byte of 16bits data first!
CRC code: two-byte check code.
Host inquiry frame structure:

address code	function code	Register start address	Register length	Checksum low byte	Check code high byte
1byte	1byte	2byte	2byte	1byte	1byte

Slave response frame structure:

address code	function code	Effective bytes	Data area	Data area two	Data N area	Checksum low byte	Check code high byte
1byte	1byte	1byte	2byte	2byte	2byte	1byte	1byte

6. 3 Register address

Register address	PLC or configuration address	content	operating	Definition description
0000 H	40001 (Decimal)	Moisture content	Read only	Real-time value of water content (expand 10 times)
0001 H	40002 (Decimal)	Temperature value	Read only	Real-time temperature value (enlarge 10 times)
0050 H	40081 (Decimal)	Temperature calibration value	Read and write	Integer (expand 10 times)
0051 H	40082 (Decimal)	Calibration value of water content	Read and write	Integer (expand 10 times)
07D0 H	42001 (Decimal)	Device address	Read and write	1 ~ 254 (factory default 1)
07D1 H	42002 (Decimal)	Device baud rate	Read and write	0 for 2400 1 for 4800 2 for 9600

Note: There is no temperature value and temperature calibration value register for single moisture equipment

6. 4Communication protocol example and explanation

Example: Read the temperature and moisture value of device address 0x01
Inquiry frame

address code	function code	starting address	Data length	Checksum low byte	Check code high byte
0x01	0x03	0x00 0x00	0x00 0x02	0xC4	0x0B

Reply frame

address code	function code	Return valid Bytes	Moisture value	Temperature value	Check code Low byte	Check code High byte
0x01	0x03	0x06	0x02 0x92	0xFF 0x9B	0x23	0xFD

Temperature calculation:

When the temperature is lower than 0 ℃, the temperature data is uploaded in the form of complement.

Temperature: FF9B H (Hexadecimal) = -101 => Temperature = -10.1 ℃

Moisture calculation:

Moisture: 292 H (hexadecimal) = 658 => Humidity = 65.8%, that is, the soil moisture content is 65.8%.

7.Common problems and solutions

7.1 Device cannot be connected to PLC or computer

possible reason:

1) The computer has multiple COM ports, and the selected port is incorrect.
2) The device address is wrong, or there are devices with duplicate addresses (the factory default is all 0x01).
3) Baud rate, check mode, data bit, stop bit error.
4) The 485 bus is disconnected, or the A and B lines are reversed.
5) If the number of devices is too large or the wiring is too long, the nearest power supply should be provided. A 485 booster should be added and a 120Ω terminal resistance should be added.
6) The USB to 485 driver is not installed or damaged.
7) The equipment is damaged.

8. Contact information

Shandong Renke Control Technology Co., Ltd.
Address: 2nd Floor, East Building, Building 8, Shuntai Plaza, High-tech Zone, Jinan City, Shandong Province
Postcode: 250101
Phone: 400-085-5807
Fax: (86) 0531-67805165
Website: www.renkeer.com
Cloud platform address: www.0531yun.cn

山东仁科测控技术有限公司 官网

欢迎关注微信公众平台，智享便捷服务

Document History

V1.0 document creation